ATTACHMENT #2

CTH GV

CTH X to CTH G

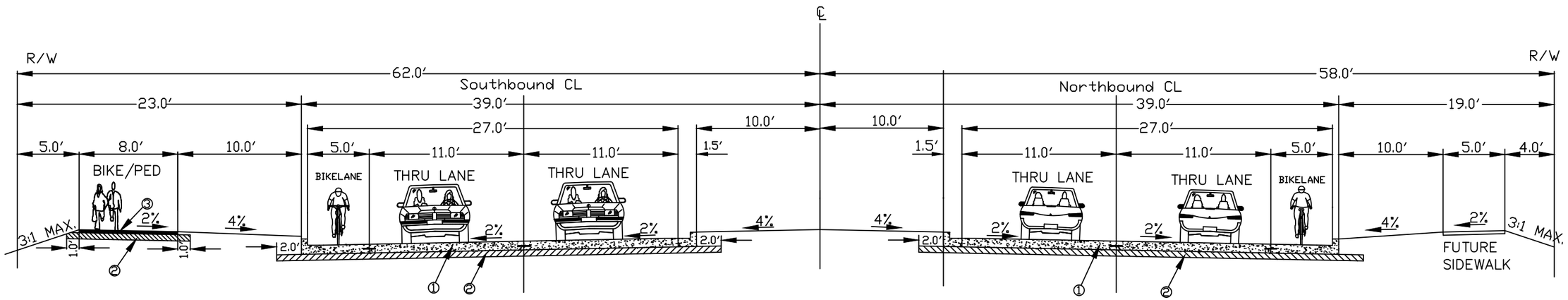

① 10" NON-REINFORCED CONCRETE PAV'T (DOWELED AND TINED)
② 6" CRUSHED AGGREGATE BASE COURSE 1-1/4"
③ 3" HMA PAVEMENT TYPE E-3

COUNTY PROJECT NUMBER: GV-10	CTH "GV"	COUNTY: BROWN	TYPICAL SECTION	NOT TO SCALE	January 29, 2013